东莞赛力科技和电路保护有限公司

Dongguan SELLI Technology and Circuits Protection Co., LTD

MODEL型号: FLM	Spec. 规格 22x15x45xD6.5mm 20A-120A32V Square fuse
Time-Current Characteristic(熔断特性): Time-Lag type	Standard(标准): JASO D614 QC/T420-2004

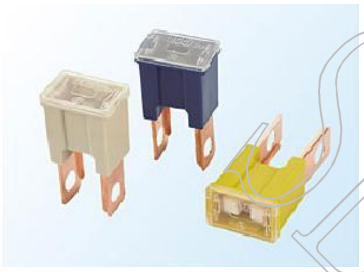

Functional Characteristics 电气特性

Testing current 测试电流	Blow time limit 熔断时间	
	Mix 最小	Max 最大
110%	4Hrs	—
200%	5sec	100sec
350%	0.2sec	7sec
600%	0.04sec	1sec

根据使用状况，熔断特性可能改变

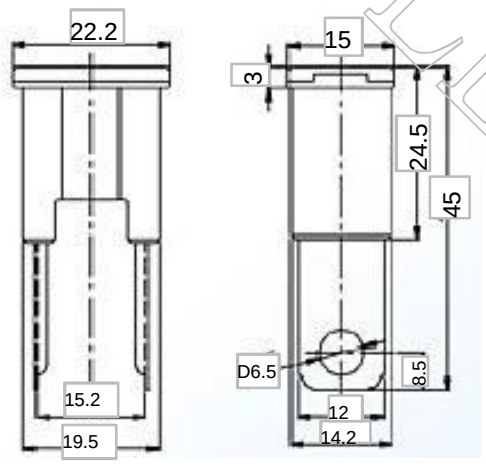

Safety Approvals 安全认证

RoHS Pb

Rohs compliance

Materials 材料

1. Case --------- PA66+GF
2. Fuse -------- Copper Alloy
3. Cap-------- PC
4. Chassis-------- Ceramic

Operating Temperature(工作温度)

-40°C to +85°C (consider de-rating)

Stock Conditions(储存条件)

+10°C to +60°C; Relative humidity ≤75% yearly average;

Without dew, maximum value for 30 days-95%

Reference information/参考信息

Ampere rating 额定电流	Voltage rating 额定电压	COLOR 胶壳颜色	P/N 零件编号
20A	≤32V	Light blue/浅蓝	FLM 20
30A		Pink/粉红	FLM 30
40A		Green/绿	FLM 40
50A		Red/红	FLM 50
60A		Yellow/黄	FLM 60
70A		Brown/褐	FLM 70
80A		Black/黑	FLM 80
100A		Blue/蓝	FLM 100
120A		White/白	FLM 120

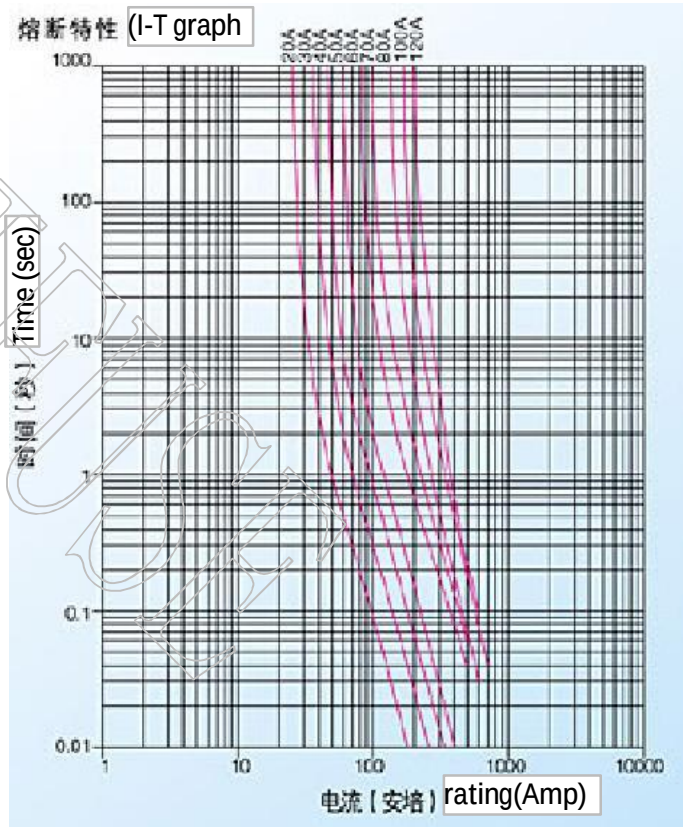

Specifications subject to change without notice

Tel: 0769-23067981 Fax: 0769-22602343 WWW.SELLIFUSE.COM sales@sellifuse.com

PDF 文件使用 "pdfFactory Pro" 试用版本创建 www.fineprint.cn